K500	Peso Kg/m Weight Kg/m	44.55	Rt °C/W	0.12	Lung. campione mm Sample length mm	150

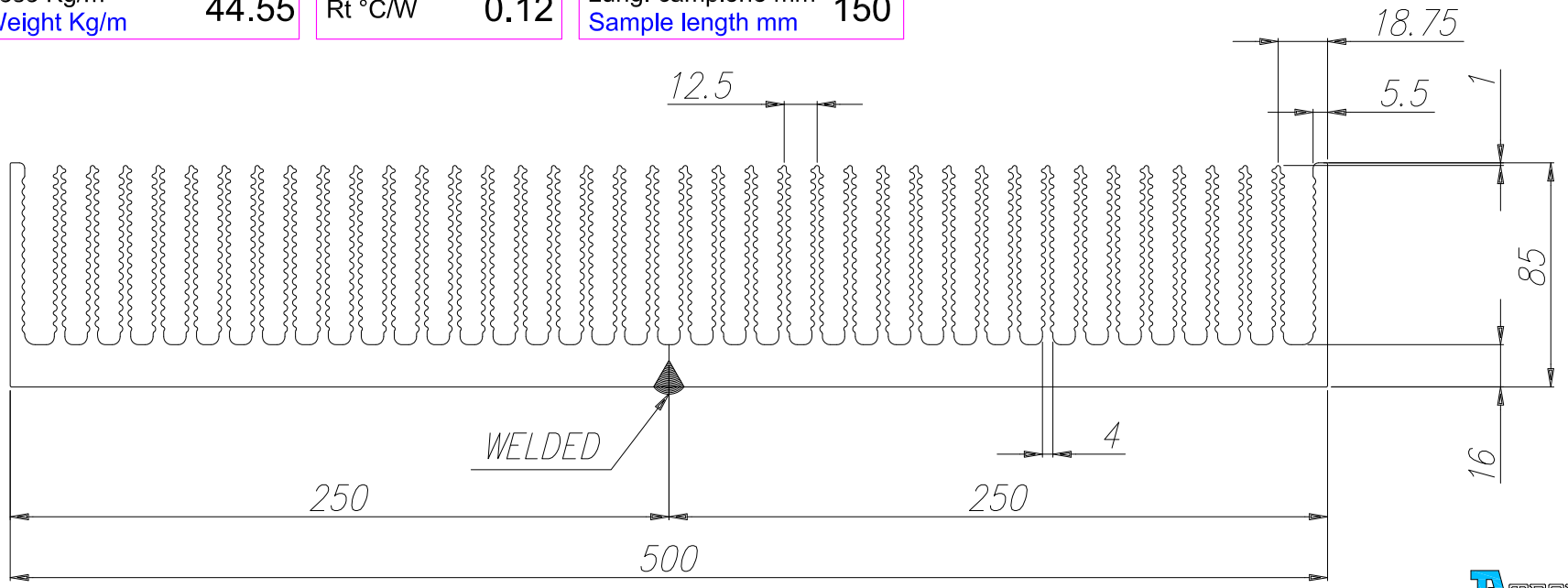

TECNOAL
BOLOGNA - ITALY

TECNOAL
MECHANICAL ENGINEERING FOR ELECTRONICS

TECNOAL
Via C. Bonazzi 19-21
40013 Castel Maggiore
Bologna - Italy
Tel : +39-051-7092301
Fax: +39-051-702335
web: www.tecnoal.it
e-mail: info@tecnoal.it

COMPANY
WITH QUALITY MANAGEMENT
SYSTEM CERTIFIED BY DNV
ISO 9001 : 2000

Notes: