K100X

Peso Kg/m Weight Kg/m	4.90
Rt °C/W	1.10
Lung. campione mm Sample length mm	100

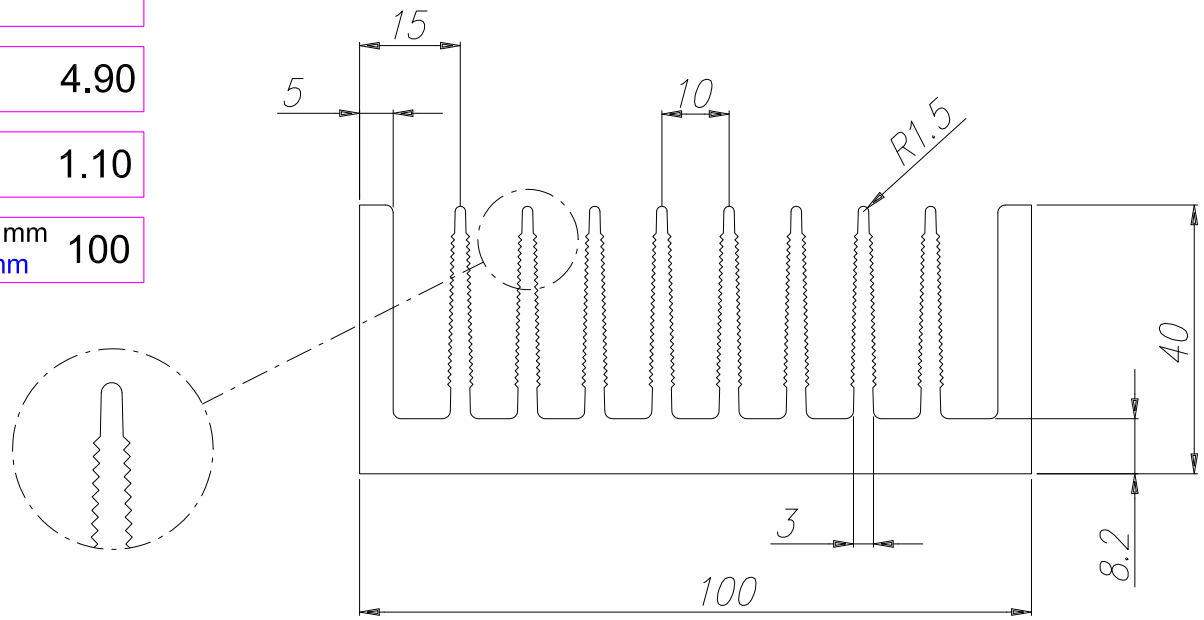

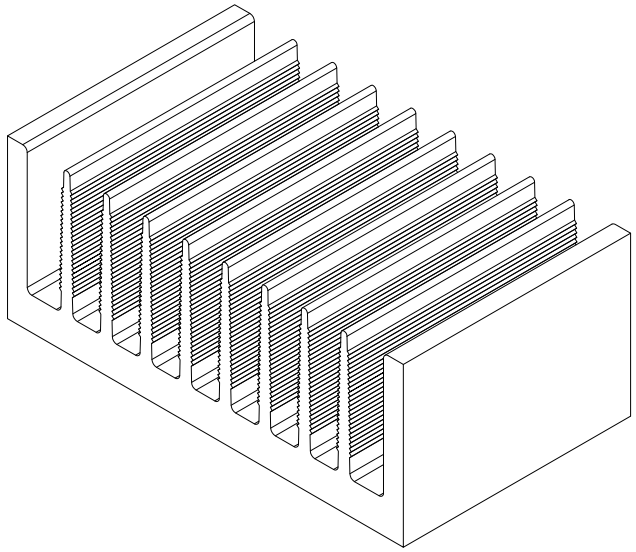

TECNOAL
BOLOGNA - ITALY

TECNOAL
MECHANICAL ENGINEERING FOR ELECTRONICS

TECNOAL
Via C. Bonazzi 19-21
40013 Castel Maggiore
Bologna - Italy
Tel : +39-051-7092301
Fax: +39-051-702335
web: www.tecnoal.it
e-mail: info@tecnoal.it

COMPANY
WITH QUALITY MANAGEMENT
SYSTEM CERTIFIED BY DNV
ISO 9001 : 2000

Notes: