I 100A

Peso Kg/m
Weight Kg/m 0.54

Dimension H on request
Dimension L on request

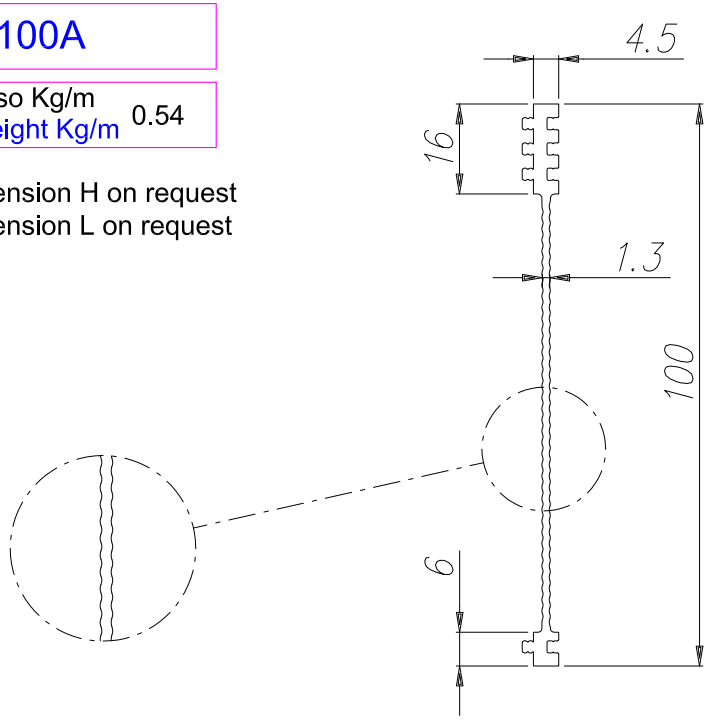

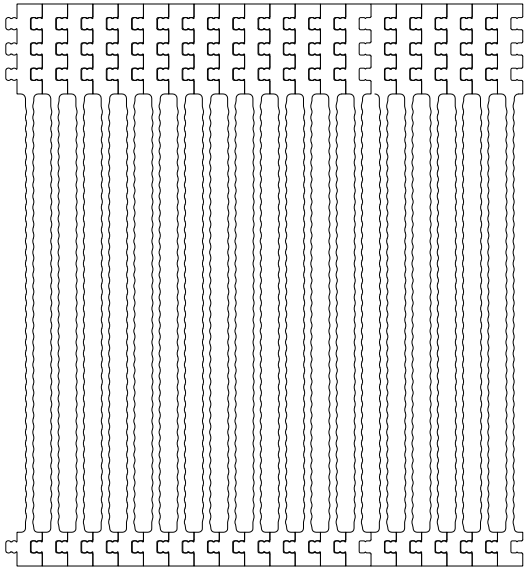

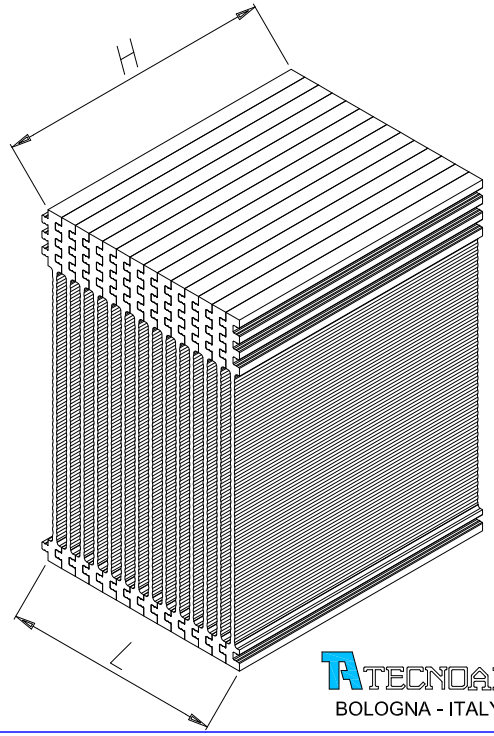

TECNOAL
BOLOGNA - ITALY

TECNOAL
MECHANICAL ENGINEERING FOR ELECTRONICS

TECNOAL
Via C. Bonazzi 19-21
40013 Castel Maggiore
Bologna - Italy
Tel : +39-051-7092301
Fax: +39-051-702335
web: www.tecnoal.it
e-mail: info@tecnoal.it

COMPANY
WITH QUALITY MANAGEMENT
SYSTEM CERTIFIED BY DNV

ISO 9001 : 2000

Notes: